Autonomous Drone Using Open CV

Submitted in partial fulfillment of the requirements

of the degree of

Bachelor of Engineering

in

Mechanical Engineering

by

Khushal Tayade 119A6020

Siddhesh Patil 119A6032

Tejas Kamble 119A6051

Sarvesh Vichare 119A6056

Under the Guidance of:

Dr. Lokpriya Gaikwad

Department of Mechanical Engineering

SIES graduate School of Technology

2022-2023

CERTIFICATE

This is to certify that the project entitled **"Autonomous Drone using Open CV"** is a Bonafide work of the following students, submitted to the University of Mumbai in partial fulfillment of the requirement for the award of the degree of **Bachelor of Engineering** in **Mechanical Engineering.**

Khushal Tayade	**119A6020**
Siddhesh Patil	**119A6032**
Tejas Kamble	**119A6051**
Sarvesh Vichare	**119A6056**

Dr. Lokpriya Gaikwad	Dr. Rupendra Nehete	Atul Kemkar
Internal Guide	**Head of Department**	**Principal**

PROJECT REPORT APPROVAL

This project report entitled (Autonomous drone using open CV)by following students is approved for the degree of ***Bachelor of Engineering*** in ***Mechanical Engineering.***

Khushal Tayade	***119A6020***
Siddhesh Patil	***119A6032***
Tejas Kamble	***119A6051***
Sarvesh Vichare	***119A6056***

Name of External Examiner: ----------

Signature:----------

Name of Internal Examiner: ----------

Signature:----------

Date:

Place:

DECLARATION

I declare that this written submission represents my ideas in my own words and where others' ideas or words have been included, I have adequately cited and referenced the original sources. I also declare that I have adhered to all principles of academic honesty and integrity and have not misrepresented or fabricated or falsified any idea/data/fact/source in my submission. I understand that any violation of the above will be cause for disciplinary action by the Institute and can also evoke penal action from the sources which have thus not been properly cited or from whom proper permission has not been taken when needed.

Khushal Tayade	119A6020
Siddhesh Patil	119A6032
Tejas Kamble	119A6051
Sarvesh Vichare	119A6056

Signature

Date:

ACKNOWLEDGEMENT

We wish to express our deep sense of gratitude and thank our Internal Guide, **Dr.Lokpriya Gaikwad** for his guidance, help and useful suggestions, which helped in completing our project work in time. We are also extremely grateful to our Project coordinator **Prof. Mohd. Ali Ansari** his guidance provided whenever required. We also thank our Hod **Dr.Rupendra Nehete** for his support in completing the project. We also thank to our Principal **Dr. Atul Kemkar**, for extending his support to carry out this project

Also, we would like to thank the entire faculty of Mechanical department for their valuable ideas and timely assistance in this project, last but not the least, we would like to thank our teaching and non-teaching staff members of our college for their support, in facilitating timely completion of this project.

Project Team

Khushal Tayade

Siddhesh Patil

Tejas Kamble

Sarvesh Vichare

ABSTRACT

In today's developing world of technology, the impact they have created on human life has been extraordinary. Vehicles have become smart and autonomous which paves way to incorporate the same into aerial and space vehicles too. Drones are relatively small sized flying vehicles that can cater to numerous humans as well as the needs of the ecosystem. Autonomous drones are a boon to humans. They are capable of navigating on their own without any user input. Machine learning and artificial intelligence play a key role in the structure of an autonomous drone design. Our project's primary goal is to provide necessities to those stranded in disaster-prone locations. Errors will be reduced during times of panic. We will be able to locate the victims easily with the aid of computer vision built into the system, and the Geolocation navigator will assist the system in determining the best route to take to approach the victims. While supplies will be delivered to inaccessible places, grippers are employed to carry the package. Gyroscope and accelerometer sensors will be used to stabilize the drone in inclement weather.

Contents

		Page No.
Chapter 1	**Introduction**	**1-14**
	1.1 Need of Project	**1**
	1.2 Problem Definition	**1**
	1.3 Objective	**2**
	1.4 Existing System	**2**
	1.5 Proposed System	**3**
	1.6 Applications	**4**
	1.7 Components and Software	**5-6**
	1.8 Factors considered for selecting the components	**7-10**
Chapter 2	**Review of Literature**	**11-16**
Chapter 3	**Methodology**	**17-18**
Chapter 4	**Report on Present Investigation**	**19-27**
	4.1 Design of quadcopter and Calculations	**19-22**
	4.2 UML diagram	**23**
	4.3 Motor Mixing algorithm	**23**
	4.4 Simulation	**24**
	4.5 Hardware Setup	**24-28**
	4.6 Autonomy	**28-31**
Chapter 5	**Results and Discussions**	**32-34**
Chapter 6	**Conclusions**	**35**
Chapter 7	**Future scope**	**36**
References		**37**
Publications		

List of Figures

Figure No.	Figure Caption	Page No.
1	Methodology	17
2	Design Calculations procedure	19
3	Components	21-22
4	UML Diagram	23
5	Simulation Model	24
6	Simulation of drone	24
7	Arduino Connections	25
8	Multiwii Setup	27
9	Code for Multiwii	27-28
10	Picam Face detection	31
11	Setup for First flight test	32
12	Changes After first flight test	33
13	First prototype of drone	33
14	Improved Design of drone	34

List of Tables

Table No.	Table Caption	Page No.
1	Weight of components	19-20
2	Standard table of sizes	20
3	Cost of components	20-21

Chapter 1

Introduction

1.1 Need of Project

Drones are relatively small size flying vehicles that can cater to numerous humans as well the need of the ecosystem. Autonomous drones are a boon to the human race they are capable of navigating on their own without any user input. Machine learning and artificial intelligence plays a key role in the structure of autonomous drone design.

The development of the computer vision and thermal imaging technology allows rescue team to use drones for detecting victims who are difficult to spot with the naked eye and access dangerous locations in the case of accidents and natuaral disasters to carry out search and rescue operations

Disasters, especially those caused by humans, pose a constant threat and are happening more frequently around the world. It is expected that ongoing terrorist attacks, wildfires, and floods will keep disaster planning in the spotlight. The nation's plans for disaster management have received more consideration from authorities. One of the crucial stages in the Disaster Response Lifecycle is the response to a disaster. Actions conducted in advance of, during, and shortly following an emergency to ensure that its consequences are minimal and that those impacted receive prompt assistance and support are referred to as disaster response. The delivery drone could allow traditional

1.2 Problem Definition

Difficulty in rescue, tracking and providing assistance to victims of disasters or accidents. And in reaching small areas affected with calamities with the current modes of aerial and terrestrial vehicles

1.3 Objectives

- Completely autonomous drone to minimize the human error during flight.
- To rescue and locate the victims stuck in an emergency situations using Computer vision and GPS Navigation.
- To transport supplies to the remote or inaccessible areas using geo sensors.
- Stabilizing the drone during harsh weathers using gyroscope and accelerometer

1.4 Existing system

The immediate response to a catastrophic occurrence is referred to as disaster response. The level of catastrophe reaction is influenced by a variety of variables including situational knowledge. Initial work demand gradually spreads and rises based on a wide range of factors, such as the size of the disaster, the vulnerability of the affected area, which is influenced by population density, site-specific conditions (such as exposure to hazardous conditions), and the effects of cascading disasters brought on by the interdependence of critical infrastructure elements.

It consists of a number of elements, including warning/evacuation, search and rescue, immediate assistance, determining the extent of damage, ongoing support, and the rapid construction of infrastructure or restoration of infrastructure (i.e. provisional storm drains or diversion dams). Delivering prompt assistance to keep people alive, improve their health, and lift their spirits is the goal of emergency response. Such assistance could be given in the form of specialized but constrained aid, such as assisting refugees with transit, temporary lodging, and food, or it could be built in the form of semi-permanent colonies in camps and other locations. Additionally, it can involve moving infrastructure or performing early repairs on damaged regions.

But the first stage is to analyze the situation and make a plan of action. Generally, Helicopters are used for researching or surveying the location of disaster as well as to distribute the health packs. Boats and response communities are used to help the ones hit by the disasters. This process is not only time consuming but also prone to errors as the community may or may not be well prepared. In such cases if some roles are trained to use the autonomous drone connectivity the problem may be analyzed on time giving a head start to the Disaster Response

team. Volunteers' lives are at stake whenever they try to help the affected areas. Whereas drones can be used from a safe zone.

transportation infrastructure to advance at the same rate that mobile phones did for personal communication in emerging nations. No longer will inaccessible roads obstruct the delivery of medical supplies like blood or medications. Our Project examines the state of autonomous drone delivery today with a focus on healthcare packs. Our model-based contribution to the design of a drone health pack would enable more timely, cost-effective, and efficient drone healthcare delivery, perhaps saving lives.

1.5 Proposed System

Traditionally drones were controlled and maneuvered using Radio frequency controllers whereas our goal is to make them completely autonomous. Autonomy of the drone minimizes human error while flying the drone in harsh weather conditions. It ensures smooth take-off and landing of the drone and safe carrying of the payload to the destination point. To achieve this level of autonomy, main attention is given to the implementation of OPEN-CV and autonomous flight codes.

The frame and propellor sizes are determined by calculating the required thrust to fly the drone above the ground and also keeping in mind the payload it is required to lift to a certain height. The motor rating (KV) is later determined once the propellor size is fixed. After finalizing the motor rating the battery for firing up the drone is determined depending on the flight time of the drone. Use of different flight time calculators is required for the same. The above determined values of propeller size, frame size and motor racing are used for the simulation of the drone. Matlab Simulink is used for the simulation of drone flight. The flight code for the drone is developed in simulink keeping in mind the feedback from the sensors a close loop mathematical is created and the model is used for simulation and also for uploading in the drone system for flight in real time. The developed code is then uploaded in the flight computer pixhawk and the implementation of opencv is also collaborated with the current system

1.6 Applications

Due to their inherent qualities of speed, quick maneuvering, time-sensitivity, GPS tracking, mapping, and cost-effectiveness, to name a few, drones are naturally highly skilled and qualified to provide their assistance and competence. Importantly, the capability of UAVs to incorporate real-time aerial imaging and surveillance expands the potential for live tracking to understand the ground conditions. Quadcopters and drones, specifically, promote and cultivate the ability to visit remote locations and sites from the air, offering significant advantages and merits.

Assessing Situations Remotely

Drones' quickness and mobility have made it possible to track and survey disaster areas and zones effectively. Naturally, disasters cover vast areas of land or sea, making them massive in size. However, UAVs and quadcopters' ability to adapt has made it easier to examine disaster-affected areas and remote locations. However, the high-resolution, sharp-focus cameras enable drones to simultaneously gather the necessary data and take real-time pictures of the incident.

Mapping Locations

Unmanned aerial vehicles (UAVs) are improving thanks to their 3D scaling and mapping characteristics. With the aid of drones and quadcopters, disaster management and control procedures have advanced. Acquiring data and information is primarily responsible for 3D mapping. Data for disaster management would include GPS coordinates, tracking details, aerial photos of landslides, tsunamis, floods, forest fires, and other disasters. Then, these data formats are translated onto 3D scales that improve the visibility of disaster locations.

Delivering Urgent Supplies

UAVs' capacity to provide emergency supplies further demonstrates their importance in disaster management by embodying complexity. First aid, quick-acting medications, and small instruments for assistance like ropes and lamps are all included in emergency kits. Additionally, drones can deliver food supplies and items that boost energy using quadcopters and drones.

1.7 Components & Softwares

Motor- A machine that uses electricity to transform electrical energy into mechanical energy is known as an electric motor. The majority of electric motors produce force in the form of torque applied to the motor shaft by interacting their magnetic field with electric current in a wire winding. Electric motors can be categorised based on factors including the type of power source, construction, application, and type of motion output. They are capable of being powered by AC or DC, brushed or brushless, single-phase, two-phase, or three-phase, axial or radial flux, and liquid- or air-cooled. Standard motor of 2300KV is chosen based on frame and propeller dimensions.

Battery- A battery is a device that uses an electrochemical oxidation-reduction (redox) cycle to turn the chemical energy included in its active components directly into electric energy. A lithium-polymer battery (LiPo) is a type of rechargeable battery that, in a real LiPo, uses lithium as one of the electrodes and solid polymer as the electrolyte. For our project, we used a LiPo 2200Mah battery that works with a 2300Kv motor.

Propeller & Frame- A device having a central hub and radiating blades arranged so that each one contributes to a helical surface. The thrust of a propeller is proportional to the product of the mass of the water or air it is working on and the rate of acceleration. After determining the payload, we determined the overall thrust as well as the thrust generated by each motor. This computation allowed us to choose the typical propeller and frame dimensions. Propeller-6inch & Frame size is of 450mm

ESC- Electronic speed control, or ESC, is a type of electronic circuit used to modify an electric motor's speed, direction, and capacity as a dynamic brake. They are widely employed on electrically driven radio-controlled models, with brushless motors serving as the most popular application because they offer a low voltage, three-phase, electronically supplied energy source for the motor. Because that Simonk 30A comes pre-calibrated, we used it as an esc in our project.

Flight Controller- A circuit board with electronic chips is what makes up a flight controller. These can be compared to your laptop's motherboard and processor. The brain of a drone is the flight controller. a compact box that monitors and regulates all drone operations using sophisticated electronics and software. The size and complexity of flight controllers also varies.

Raspberry Pi- The Raspberry Pi is a reasonably priced, credit-card-sized computer that connects to a computer monitor or television and makes use of a regular keyboard and mouse. It's a capable small gadget that lets users of all ages learn about computing and how to code in languages like Scratch and Python.

Picam -A specially created add-on component for the Raspberry Pi computer is the Camera Board. It connects to the Raspberry Pi hardware using a unique CSI interface. The sensor's native resolution in still capture mode is 5 megapixels. Up to 1080p at 30 frames per second can be captured in video mode.

Gps module- Drones with GPS capabilities may determine their location in relation to a system of orbiting satellites thanks to a GPS module built inside the drone. The drone can execute tasks including locating, autonomous flight, return to home, and waypoint navigation when it is connected to the signals of these satellites. We have used Neo 8M GPS Module.

IMU- Gyroscopes are commonly used in an inertial measurement unit (IMU) to measure and record angular rate. The vibration or acceleration of motion of a structure is measured by an accelerometer. A 3-axis accelerometer and 3-axis gyroscope are both found inside the MPU6050 Micro Electro-Mechanical System (MEMS).

Barometer- Drones employ barometers as altitude sensors to determine the pressure of the atmosphere. he BMP180 is a digital barometric pressure sensor that can be used as a barometer in various applications. Here are some reasons why the BMP180 is a good choice for a barometer- High Accuracy, Low Power Consumption, Compact Size.

Arduino IDE- An open-source software platform called the Arduino Integrated Development Environment (IDE) is used to program and create applications for Arduino boards. While authoring, building, and uploading code to an Arduino board, the Arduino IDE offers a straightforward and user-friendly interface. The IDE has support for several programming languages, including C and C++.

MultiWii- Being an open-source software project that offers a firmware solution for controlling multi-rotor aircraft, such as quadcopters, hexacopters, and octocopters, we have used MultiWii in our project. It is powered by a variety of flight control boards, including microcontrollers and boards built on the Arduino platform.

1.8 Factors considered for selecting the components

1) Motor:

Thrust-to-Weight Ratio: The motors you choose should be able to provide enough thrust to lift the weight of the quadcopter and any payload it may be carrying. A good rule of thumb is to aim for a thrust-to-weight ratio of at least 2:1.

Motor KV Rating: The KV rating of a motor is a measure of its rotational speed. Generally, lower KV ratings are better for larger, heavier propellers, while higher KV ratings are better for smaller, lighter propellers.

Power Consumption: The motors you choose should be efficient enough to provide the necessary thrust while not draining your battery too quickly. Lower KV motors tend to be more efficient than higher KV motors.

Durability: Quadcopters can take a lot of abuse, so it's important to choose motors that are durable and can withstand crashes and other mishaps.

Compatibility with ESCs: Make sure the motors you choose are compatible with thezzzzz electronic speed controllers (ESCs) you plan to use.

Brand and Price: There are many different brands of motors available, and prices can vary widely. Choose a reputable brand and make sure the price is within your budget.

2) Electronic Speed Controller (ESC)

Compatibility: The ESCs must be compatible with the motor and flight controller used in the quadcopter.

Amp rating: The ESCs should be able to handle the maximum current draw of the motor. This is especially important for high-performance racing drones.

Voltage rating: The ESCs should be able to handle the voltage supplied by the battery. Most quadcopters use 3S or 4S LiPo batteries, so the ESCs should be rated accordingly.

Size and weight: The size and weight of the ESCs should be considered to ensure they fit and do not add too much weight to the quadcopter, which can affect its flight performance.

Firmware and features: The firmware and features of the ESCs can affect the performance and functionality of the quadcopter. Some ESCs have built-in features such as telemetry and programmable settings that can be adjusted using a computer or app.

Brand and reliability: It is important to choose reputable brands and models known for their reliability and durability.

Price: The cost of the ESCs should be considered in relation to the overall budget for the quadcopter's build. It's important to find a balance between quality and affordability.

3) Battery:

Voltage: The voltage of the battery is an important consideration because it affects the overall power output of the quadcopter. Most quadcopters are designed to run on 3S or 4S batteries, which provide a voltage of 11.1V and 14.8V, respectively.

Capacity: The capacity of the battery is measured in milliampere-hours (mAh) and determines how long the quadcopter can fly before the battery needs to be recharged. Higher capacity batteries typically provide longer flight times but may also be heavier.

Weight: The weight of the battery is an important consideration because it affects the overall weight of the quadcopter. A heavier battery will reduce the flight time and maneuverability of the quadcopter.

Discharge rate: The discharge rate of the battery determines how much power can be drawn from the battery at once. Higher discharge rate batteries are required for more powerful motors and more aggressive flight styles.

Connector type: The connector type of the battery should be compatible with the quadcopter's power distribution board.

Price: The price of the battery is also an important consideration, as high-end batteries can be expensive.

Brand reputation: The reputation of the brand should also be considered, as a well-respected brand will typically offer higher-quality batteries that are less likely to fail or cause issues during flight.

4)Frame Size

Some of the factors that are typically considered when selecting a frame size for a quadcopter include:

Payload capacity: The frame size of a quadcopter must be able to support the weight of the intended payload. The larger the payload, the larger the frame size needed to accommodate it.

Flight time: The size and weight of the quadcopter affect its flight time. A larger frame size can support larger batteries and provide longer flight times.

Maneuverability: A smaller frame size can result in a more agile and maneuverable quadcopter, while a larger frame can provide more stability and smoother flight.

Environment: The frame size should also be selected based on the environment in which the quadcopter will be used. For example, a smaller frame may be more suitable for indoor flying, while a larger frame may be better for outdoor applications with stronger winds.

Cost: The frame size can also affect the overall cost of the quadcopter. Generally, larger frames and components are more expensive than smaller ones.

Skill level: The skill level of the pilot should also be considered when selecting a frame size. A smaller, more agile quadcopter may be more challenging to fly for a beginner pilot, while a larger, more stable quadcopter may be more forgiving.

5) Propeller Size

When selecting a propeller size for a quadcopter, there are several factors that need to be considered. Here are some of the key factors:

Motor size and KV rating: The size and KV rating of the motor will determine the maximum size of the propeller that can be used. Larger motors can handle larger propellers.

Quadcopter weight: The weight of the quadcopter will determine the amount of thrust needed to lift it off the ground. The propeller size should be chosen to provide enough thrust to lift the quadcopter and any additional payload.

Flight time: The size of the propeller will also affect the flight time of the quadcopter. Larger 0propellers can provide more thrust but will also consume more battery power, resulting in shorter flight times.

Flight characteristics: The size of the propeller can also affect the flight characteristics of the quadcopter. For example, larger propellers will provide more stability and lift, while smaller propellers will be more agile and responsive.

ESC and battery compatibility: The propeller size should be compatible with the ESC (Electronic Speed Controller) and battery used in the quadcopter.

Environmental conditions: The propeller size may need to be adjusted depending on the environmental conditions, such as wind speed and altitude. In high-altitude locations, for example, larger propellers may be needed to provide sufficient lift.

CHAPTER 2

REVIEW OF LITERATURE

2.1 Autonomous Drone for Defense Machinery Maintenance and SurveillanceDate :2021

This research project's main goal is to develop an autonomous unmanned aerial vehicle (UAV) that is flown by a pix hawk flight controller. The quadcopter can be programmed to follow a predetermined path independently and is capable of autonomous navigation without real-time input from the operator. The programme offers an autonomous flight strategy for quad copters, trajectory tracking, fluid motion, and precise altitude hold performance. The main defense-related applications created for Line Of Control and combat zones are surveillance and machinery maintenance.The goal of this project is to create a quadcopter that can be instructed to fly through predetermined route locations. The cloud-based deep learning technology uses data from camera and ultrasonic sensors to identify human motions. Using a Sjcam 5000x elite Camera, deviations from the established protocol are discovered.Additionally, a backup auxiliary small drone is programmed to eject with the information in the memory of the primary drone in the event of an assault or unanticipated disaster that compromises the primary drone's capacity to fly.The drone's architecture has been pre-trained by humans and is stored on the cloud. The reduction of the time and need for human operators is the main goal of research into autonomous drones and navigation. This has the benefit of improving reconnaissance capabilities at a lower risk and cost in terms of time and money. When it comes to keeping an eye on and maintaining them in the case of an error or malfunction, machinery and weapons equipment constitute a major hazard to humans. An autonomous drone can do this with ease since it has the necessary hardware to interact with the gadget installed on the machinery, which wirelessly updates the drone's status while it is in flight within its communication range.

2.2 Image Processing based Drone for Monitoring and Surveillance

Date :2020

This research paper's objective is to develop a lightweight, reasonably priced quadcopter. A RC (Remote Controller) will wirelessly control the quadcopter from a predetermined distance. This small device will collect data from the quadcopter's camera, such as video and photos, and store

it on a memory card. For video surveillance, multiple object detection and tracking are crucial. Due to its effectiveness in collecting distant images that are difficult to see through physical inspection, a drone or Unnamed Aerial Vehicle is particularly valuable for aerial surveillance.

This initiative will significantly improve the efficiency with which a greater geographic region can be inspected, particularly in densely populated locations during festivals.To demonstrate how it worked, our drone would record the incoming signals with its camera, save the data to the SD card within the UAV at the same time, and stream the video feed to the associated smartphone device via an application (available for Android or iOS). Once it has successfully completed its maneuver, we can extract the video into a computer and use openCV to identify the faces of any persons in it and retrieve their data from the face database that has already been stored

2.3 Autonomous drone Programming Feature detection, tracking, and obstacle avoidance
Date :2021

The goal of this work is to create a proof-of-concept autonomous drone that can perform basic tasks like tracking a specific feature (such as a face or body part) and taking photos in real-time. Additionally, for operational and safety reasons, the described system must be able to identify and avoid environmental obstacles, map the precise coordinates of the drone in real-time, and switch to keyboard control when necessary. The contribution of this work is to identify a worthwhile trade-off between accuracy and speed (response time), which is imposed by the limitations of the commercial hardware (Tello Drone) used in this paper. This contribution goes beyond the design and implementation of a straightforward, comprehensive, and functional system. Steering control, face detection, and tracking were accomplished using Haar-like features, a cascade classifier, a PID controller, and Arcuo Markers. Future research in this area might examine how each strategy performs in various settings with various contrast levels. On the other hand, applying depth estimation techniques based on a deep learning strategy can increase obstacle avoidance capability and enable reliable navigational skills in a variety of situations.

2.4 Autonomous drone Programming Feature detection, tracking, and obstacle avoidance
Date :2021

The goal of this work is to create a proof-of-concept autonomous drone that can perform basic tasks like tracking a specific feature (such as a face or body part) and taking photos in real-time.

Additionally, for operational and safety reasons, the described system must be able to identify and avoid environmental obstacles, map the precise coordinates of the drone in real-time, and switch to keyboard control when necessary.The contribution of this work is to identify a worthwhile trade-off between accuracy and speed (response time), which is imposed by the limitations of the commercial hardware (Tello Drone) used in this paper. This contribution goes beyond the design and implementation of a straightforward, comprehensive, and functional system.Steering control, face detection, and tracking were accomplished using Haar-like features, a cascade classifier, a PID controller, and Aruco Markers.Future research in this area might examine how each strategy performs in various settings with various contrast levels. On the other hand, applying depth estimation techniques based on a deep learning strategy can increase obstacle avoidance capability and enable reliable navigational skills in a variety of situations.

2.5 Implementation of Computer Vision in FPV Drones

Date :2020

This paper consists of implementation of computer vision on simple FPV drones. The drone falls in the category of VTOL drones which goes by “Vertical Take-Off and Landing”. Now as the drones are small with a limited flight time and no payload can be delivered externally so the drones cannot be built using bulky or heavy materials. The drones are required to be compact with longer flight time so the use of light and more durable materials such as carbon fiber are used to build the drones.They have used brushless DC motors of 2200Kv capacity. The ESC’s are electronic speed controllers that regulate the speed of the motor’s to help maneuver the drone. The flight controller interprets input from receiver, GPS module, battery and other onboard sensors like accelerometer, gyroscope etc. The hardware setup consists of Naze32(Flight controller) and Raspberry Pi Zero.The setup for the computer vision includes a Raspberry Pi Zero and a camera.. The images from the camera are processed on the raspberry pi using the OpenCV and NumPy libraries. The major drawback is that the drone has to be operated by a person. This can be eliminated by upgrading it to an autonomous drone.

2.6 A Research Overview of Deep Learning in Drone Navigation Autonomy

Date :2021

With the rise of Deep Learning approaches in computer vision applications, significant strides have been made towards vehicular autonomy. Research activity in autonomous drone

navigation has increased rapidly in the past five years, and drones are moving fast towards the ultimate goal of near-complete autonomy. A top–down examination of research work in the area is conducted, focusing on drone navigation tasks, in order to understand the extent of research activity in each area. Autonomy levels are cross-checked against the drone navigation tasks addressed in each work to provide a framework for understanding the trajectory of current research. As small form factor UAVs flooded the market, several industries adopted these devices for use in areas including but not limited to cable inspection, product monitoring, civil planning, agriculture and public safety. In research, this technology has been used mostly in areas related to data gathering and analysis to support these applications. However, direct development of navigation systems to provide great automation of drone operation has become a realistic aim, given the increasing capability of Deep Neural Networks (DNN) in computer vision, and its application to the related application area, vehicular autonomy. We apply the Six levels of autonomy standard published by the Society of Automation Engineers (SAE) International. As a first step, we need to define the concept of autonomy for drones, with a view to recognizing different levels of autonomous navigation. Level 2 autonomous features are navigational operations that are specific and use case dependent, where an operator must monitor but not continuously control. Level 3 features allow for autonomous navigation in certain identified environments where the pilot is prompted for engagement when needed. At level 4 the drone must navigate autonomously within most use cases without the need for human interaction. Level 5 autonomy implies Level 4 autonomy but in all possible use cases, environments and conditions and as such is considered a theoretical ideal that is outside the scope of this overview.

2.7 Object Detection using Image Processing

Fares Jalled and Ilia Voronkov's article "Object Detection using Image Processing" describes the process of object detection using image processing techniques. The article begins by explaining the importance of object detection in various fields such as security, surveillance, and robotics.The authors then describe the steps involved in object detection, including image acquisition, preprocessing, feature extraction, and classification. They explain various image processing techniques such as edge detection, thresholding, and morphological operations, which are used for preprocessing and feature extraction.The article also discusses popular object detection algorithms such as Haar Cascade, Viola-Jones, and YOLO (You Only Look Once), and compares their advantages and disadvantages. The authors also explain the

importance of choosing the right dataset for training and testing object detection models.The article concludes with a discussion on the challenges in object detection and future research directions, such as improving the accuracy and speed of object detection algorithms, and developing techniques for detecting objects in challenging environments such as low light conditions or occluded scenes.Overall, the article provides a comprehensive overview of the techniques and algorithms used in object detection using image processing, and can be a useful resource for researchers and practitioners in the field.

2.8 Autonomous UAV Flight Control for GPS-Based Navigation

The paper "Autonomous UAV Flight Control for GPS-Based Navigation" by Jeonghoon Kwak and Yundick Sung, published in IEEE on June 28, 2018, presents a control algorithm for unmanned aerial vehicles (UAVs) based on GPS navigation.The authors propose a control system that uses GPS signals to determine the position, velocity, and orientation of the UAV, and then uses this information to control the flight of the vehicle. The system consists of four components: a GPS receiver, an inertial measurement unit (IMU), a flight controller, and a motor controller.The GPS receiver provides the position and velocity of the UAV, while the IMU measures the vehicle's orientation. The flight controller uses this information to calculate the desired attitude and thrust for the UAV, which is then sent to the motor controller to adjust the speed of the motors.The authors also discuss the implementation of their algorithm on a commercially available UAV, and present experimental results demonstrating the effectiveness of their approach. They show that their system can successfully navigate the UAV to a predefined waypoint and maintain a stable hover position.Overall, the paper presents a practical and effective approach for autonomous UAV flight control using GPS-based navigation.

2.9 Introduction to the special section on video surveillance

The paper "Introduction to the special section on video surveillance" by Ff. R.T. Collins, A.J. Lipton, and T. Kanade, published in IEEE Transactions on Pattern Analysis and Machine Intelligence in 2000, provides an overview of the articles in the special section on video surveillance.The authors note that video surveillance has become an important application of computer vision and image analysis. The special section includes articles on various topics such as object tracking, face detection, and behavior analysis. The authors highlight the importance of developing video surveillance systems that are able to handle the challenges posed by real-world scenarios, such as low lighting conditions, occlusions, and camera motion.The authors

conclude by stating that the articles in the special section represent important contributions to the field of video surveillance and demonstrate the progress that has been made in developing effective surveillance systems. They also note that there is still much work to be done in this area, particularly in developing more robust and reliable systems that can operate in complex and dynamic environments.

2.10 Digital Image Processing

"Digital Image Processing" by Rafael C. Gonzalez and Richard E. Woods is a comprehensive textbook on digital image processing. It was first published in 1987 and has since been updated twice, with the third edition published in 1992.The book covers a wide range of topics related to digital image processing, including image enhancement, restoration, segmentation, compression, and representation. It starts with an introduction to digital image processing and image formation, followed by a discussion of image sampling and quantization. The authors then cover various image enhancement techniques, including point processing, histogram processing, spatial filtering, and frequency domain processing. Next, the book covers image restoration techniques, including image deblurring and denoising. The authors also discuss image segmentation techniques, such as thresholding, region-based segmentation, and edge detection. The book then covers various image compression techniques, including lossless and lossy compression methods. The final part of the book covers advanced topics such as image recognition, image understanding, and computer vision. The authors provide numerous examples and illustrations throughout the book, and each chapter includes exercises to help readers reinforce their understanding of the material., "Digital Image Processing" by Gonzalez and Woods is a well-regarded textbook in the field of digital image processing. Its clear and comprehensive coverage of a wide range of topics has made it a popular choice for students and researchers alike.

CHAPTER 3

METHODOLOGY

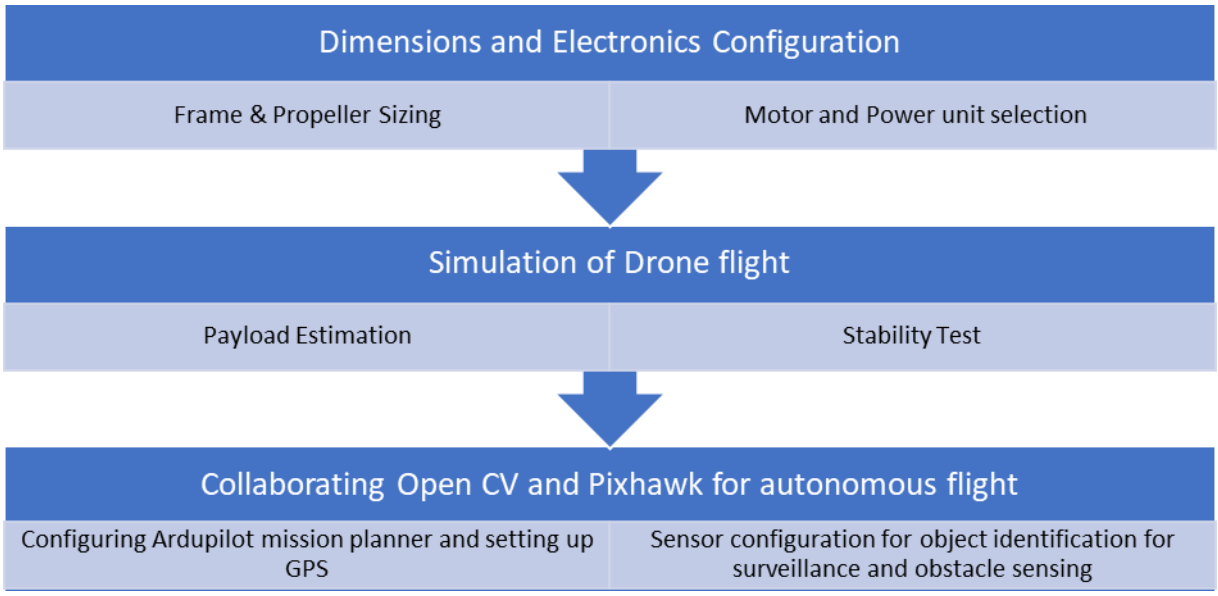

FIG 1: Methodology

This Flight controller will have features like those of NAZA and APM the only difference here is the PID wherein you will need to be patient in getting your drone tuned. To make tuning easier I included a Bluetooth module to ease the tuning step with out the use of your computer.

The methodology for an autonomous drone using OpenCV typically involves the following steps:

The first step is to set up the hardware required for the autonomous drone. This includes the drone propellers, Drone Frame, accelerometer, gyroscope, arduino, Battery, BLDC motor, ESC 30amp, Symmetric multiprocessor, bluetooth module, GPS module, IC, Remote controller, pressure sensor, camera a processing unit (such as a Raspberry Pi).

The flight controller, the drone's central processing unit, is responsible for controlling the motors and ESC. We have created the flight controller for this internally using Arduino. An electronics board is used to mount sensors, processors, communication protocols, and transmitter pins. A flight controller controls every part of the drone. The drone may be maneuvered by varying the RPM of the motors. This is accomplished by receiving signals from

sensors, passing them to the CPU, who in turn provides the control signal to the ESCs, instructing the ESCs to accurately adjust the motor rotational speeds to balance the flight. This information is processed before being sent to the ESCs, which adjust each motor's rotational speed to control the flying orientation (yaw, right, left, up, down, backward, forward).

The required software for the autonomous drone system must then be installed. This includes any further software needed for navigation and control, as well as the OpenCV library for object identification and tracking.

The following stage is to use OpenCV to create an object detection and tracking method. This programme needs to be able to monitor moving objects using the camera or other sensors, identify them in real-time, and report their coordinates and other pertinent data.

The development of a navigation and control algorithm comes after the object recognition and tracking algorithm has been created. The movement and navigation of the drone should be managed by this algorithm using the object coordinates and other pertinent information.

The autonomous drone system as a whole must be integrated with the object recognition and tracking algorithm as well as the navigation and control algorithm. To make sure the system is accurate and effective, many real-world scenarios must be tested.

CHAPTER 4

PRESENT REPORT ON INVESTIGATION

4.1 Design and Calculations of Quadcopter

The design of the Quadcopter is based on the following parameters

Thrust:

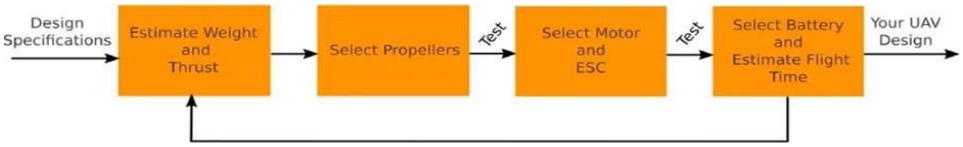

FIG2: Design Calculation procedure

Thrust is the force required by the drone to overcome the normal force on the drone and lift it above the ground. Thrust is calculated as the total weight of the drone and then further divided by the number of arms ie. The number of motors to obtain thrust at each arm.

Weight Calculation:

NAME	QTY	WEIGHT (in gms)
Motors	4	100
Battery	1	145
Propeller	4	120
ESC	1	244
Flight Controller	1	16
Miscellaneous		160
Raspberry Pie	1	50
Servomotor	1	10
Picam	1	3
Lift capacity		70+300

	TOTAL	1250

Table 1: Weight of components

Thrust = Total weight*9.18 = 1.25*9.18 = 12.26N

Thrust per motor = Total Thrust/4 = 12.26N/4 = 3.065N

Maximum thrust = 2*(Thrust per motor) = 2*3.065 = 6.13N ……. (Assumption)

Considering the below standard table and required thrust values :

Frame size	Propeller size	Motor Size	KV Rating
150 mm or smaller	3 inch or smaller	1306 or smaller	3000 KV or higher
180 mm	4 inch	1806	2600 KV
210 mm	5 inch	2204-2206	2300 KV-2600 KV
250 mm	6 inch	2204-2208	2000 KV-2300 KV
350 mm	7 inch	2208	1600 KV
450mm	8/9/10 inch	2212 or larger	1000 KV or lower

Table 2: Standard Table of sizes

The Frame Size is finalized to be 250mm.

The Propeller Size will be 6inch.

Motor Rating will be 2300kv.

NAME	QUANTITY	RATE	TOTAL
Propeller (6 inches)	2 Pair	120	120
Motor (2300KV) + ESC (30 AMP)	4	1500	6000
Frame (250mm)	1	1200	1200
Battery(2200mah)	1	1500	1500
GPS (Neo 8m)	1	2200	2200
RC (Receiver + transmitter)	1	4500	4500
Ultrasound sensor	1	130	130

Pressure sensor	1	2500	2500
Camera	1	1300	1300
IMU	1	550	550
Total			20,000

Table 3: Cost of components

Propeller

Motor (2200KV)

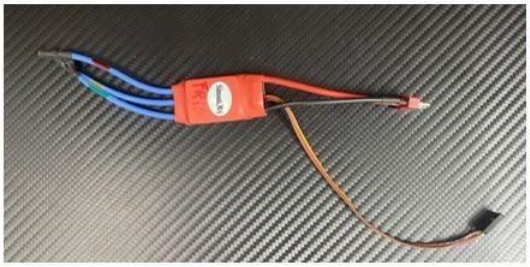

ESC (30amp)

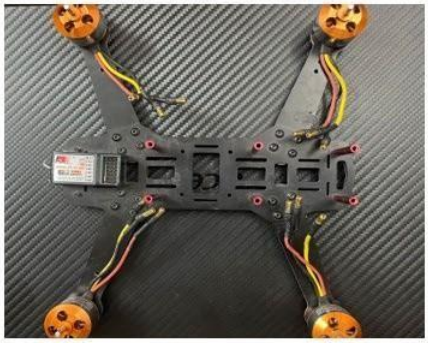

Frame (250mm)

Flipo Battery (2200mAh)

GPS Module

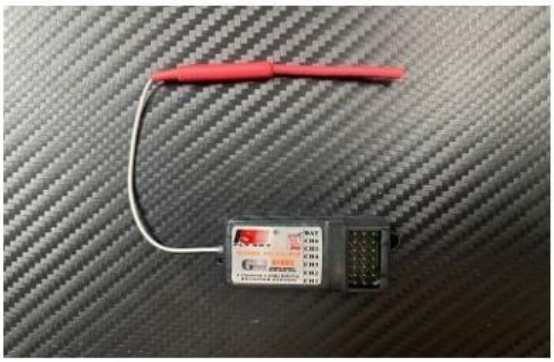

Receiver

Transmitter

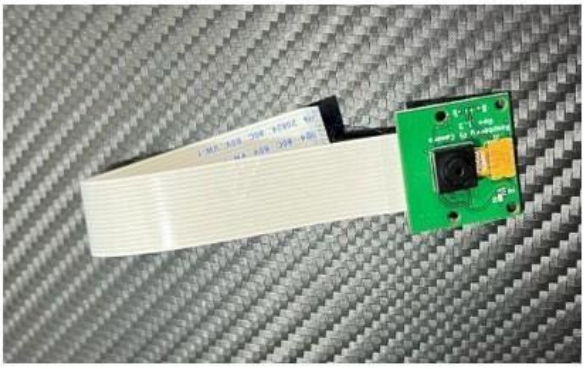

Camera (5MP)

RasberryPi

FIG 3: Components

4.2 UML Diagram

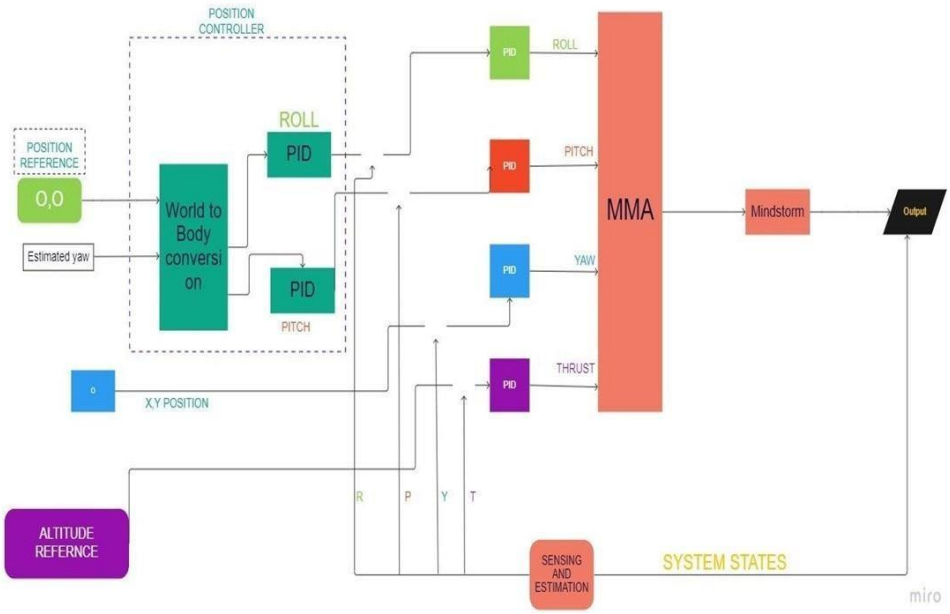

FIG 4: UML Diagram

4.3 Motor Mixing Algorithm:

Motor (front right) = Thrust(cmd) + Yaw(cmd) + Pitch(cmd) + Roll(cmd)

Motor (front left) = Thrust(cmd) - Yaw(cmd) + Pitch(cmd) - Roll(cmd)

Motor (back right) = Thrust(cmd) - Yaw(cmd) - Pitch(cmd) + Roll(cmd)

Motor (back left) = Thrust(cmd) + Yaw(cmd) - Pitch(cmd) - Roll(cmd)

The above motor mixing algorithm is used to maneuver the drone in a particular direction.

Altitude: For altitude changing the thrust of all four rotating motors are either increased or decreased as required.

Yaw: For Yaw i.e. spinning in the vertical axis the thrust of the two motors (one front, one back) decreased causing the drone to yaw.

Pitch: For pitching the thrust of two motors (both front, both back) are decreased to pitch forward or backward.

Roll: For rolling sideways the thrust of two motors (one in front, one in backward) is decreased.

4.4 Simulations

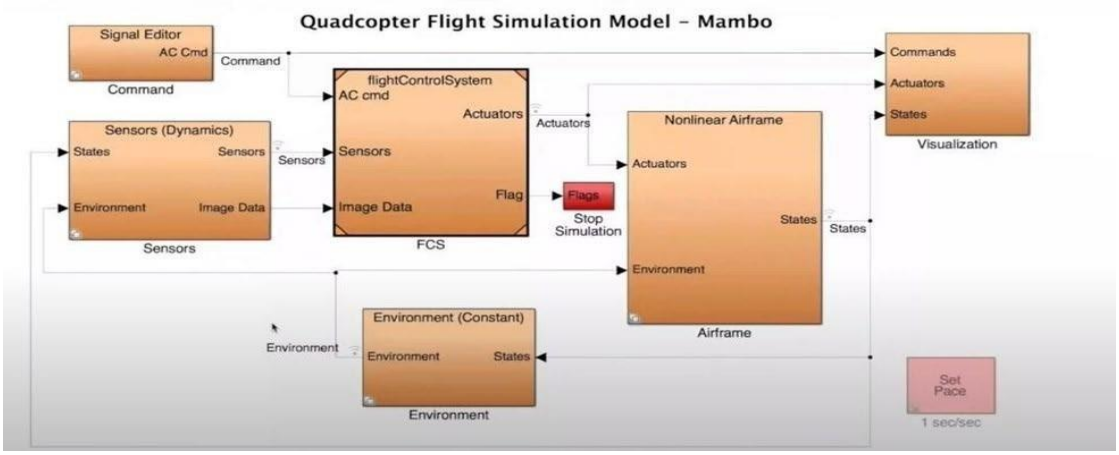

FIG 5: Simulation Model

Here is an example of the aerospace block set used to program the flight code and upload the code in Parrot Mini drones.

FIG 6: Simulation of Drone

4.5 Setup

1. Flight Controller Setup

First, we created a flight controller using an Arduino, an MPU 6050 (a gyroscope and an accelerometer), and a BMP 180 (a barometer). The circuit connection for the flight controller is shown below.

2. ESC Calibration

We calibrated the ESC by following these procedures.

Step 1: To connect one of the ESC's wires to the battery and the other to the transmitter's channels

Step 2: To Maintain the CT6B (Remote Controller) throttle at its highest setting. (upwards)

Step 3: The controller will beep when you turn it on.

Step 4: Move the throttle to the lowest position (downwards) after one beep in.

Step 5: To check If the calibration of the ESC is successful, three beeps from the ESC will be audible.

Do the same steps for all 4 ESC’s

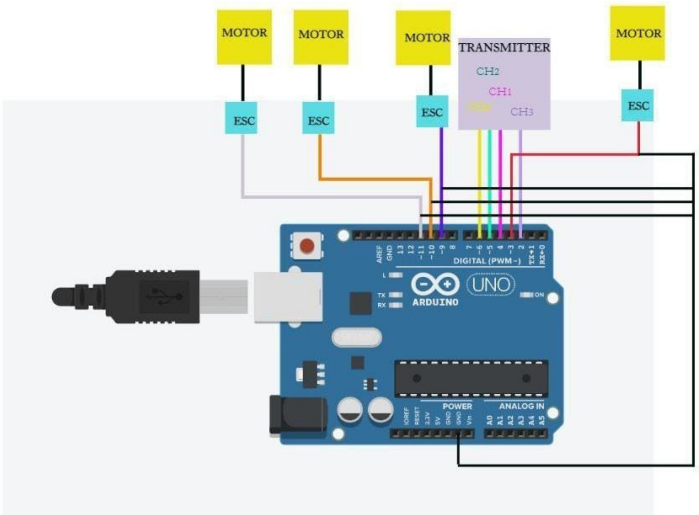

FIG 7: Arduino Connections

3. Configuration of multiwii

Step 1: We downloaded the Arduino IDE and Multiwii software.

Connected computer to the flight controller.

Opening the "MultiWii.ino" Arduino file from the MultiWii folder that has previously been downloaded to PC.

Step 2: Accessing the "config.h" tab, removing the "//", and choosing the desired multirotor type.Then we entered our transmitter's minimum and maximum parameters by scrolling down.

Minimum –1064

Maximum-2000

Removed the sensors' comments.

Step 3: Selecting the Arduino micro-controller used by clicking Tools, Boards, on the IDE's top menu.

Selecting the port on the computer that the controller is on by clicking Tools, Port.

Then by clicking the arrow-shaped button we uploaded the Multiwii code.

IDE displayed the words "uploaded successfully" after the upload.

Step 4: Opening MultiWiiConf, application. windows32 (or the appropriate operating system option) by opening MultiWii folder, and then launching MultiWiiConf.exe.

Chose the port that our flight controller is on in the upper left corner of the window, then clicked start. The program displayed sensor values.

Step 5: Selecting the sensor type on the right. The flight controller was slowly moved or tilted as directed to calibrate the sensor.

On the application, a model of the desired drone showed up. Its motions resembled those of the flight controller.

Multi Wii's GUI is used to calibrate the accelerometer, barometer, and gyroscope.

The drone is now ready to be flown manually using the remote controller when this phase is finished.

FIG 8: MULTIWII setup

```
/*************************    The type of multicopter    **************************/
  //#define GIMBAL
  //#define BI
  //#define TRI
  //#define QUADP
    #define QUADX
  //#define Y4
  //#define Y6
  //#define HEX6
  //#define HEX6X
  //#define HEX6H  // New Model
  //#define OCTOX8
  //#define OCTOFLATP
  //#define OCTOFLATX
  //#define FLYING_WING
  //#define VTAIL4
  //#define AIRPLANE
  //#define SINGLECOPTER
  //#define DUALCOPTER
  //#define HELI_120_CCPM
  //#define HELI_90_DEG

/***************************    Motor minthrottle    ******************************/
  /* Set the minimum throttle command sent to the ESC (Electronic Speed Controller)
     This is the minimum value that allow motors to run at a idle speed  */
  //#define MINTHROTTLE 1300 // for Turnigy Plush ESCs 10A
  //#define MINTHROTTLE 1120 // for Super Simple ESCs 10A
  //#define MINTHROTTLE 1064 // special ESC (simonk)
  //#define MINTHROTTLE 1050 // for brushed ESCs like ladybird
  #define MINTHROTTLE 1150 // (*) (**)

/***************************    Motor maxthrottle    ******************************/
  /* this is the maximum value for the ESCs at full power, this value can be increased up to 2000 */
  #define MAXTHROTTLE 1950
```

```
#define CRIUS_SE_v2_0   // Crius MultiWii SE 2.0 with MPU6050, HMC5883 and BMP085
//#define OPENLRSv2MULTI  // OpenLRS v2 Multi Rc Receiver board including ITG3205 and ADXL345
//#define BOARD_PROTO_1   // with MPU6050 + HMC5883L + MS baro
//#define BOARD_PROTO_2   // with MPU6050 + slave  MAG3110 + MS baro
//#define GY_80           // Chinese 10 DOF with  L3G4200D ADXL345 HMC5883L BMP085, LLC
//#define GY_85           // Chinese 9 DOF with  ITG3205 ADXL345 HMC5883L LLC
//#define GY_86           // Chinese 10 DOF with  MPU6050 HMC5883L MS5611, LLC
//#define GY_521          // Chinese 6  DOF with  MPU6050, LLC
//#define INNOVWORKS_10DOF // with ITG3200, BMA180, HMC5883, BMP085 available here http://www.diymulticopter.com
//#define INNOVWORKS_6DOF // with ITG3200, BMA180 available here http://www.diymulticopter.com
//#define MultiWiiMega    // MEGA + MPU6050+HMC5883L+MS5611 available here http://www.diymulticopter.com
//#define PROTO_DIY       // 10DOF mega board
//#define IOI_MINI_MULTIWII// www.bambucopter.com
//#define Bobs_6DOF_V1     // BobsQuads 6DOF V1 with ITG3200 & BMA180
//#define Bobs_9DOF_V1     // BobsQuads 9DOF V1 with ITG3200, BMA180 & HMC5883L
//#define Bobs_10DOF_BMP_V1 // BobsQuads 10DOF V1 with ITG3200, BMA180, HMC5883L & BMP180 - BMP180 is software compatible with BMP085
//#define FLYDUINO_MPU       // MPU6050 Break Out onboard 3.3V reg
//#define CRIUS_AIO_PRO_V1
//#define DESQUARED6DOFV2GO  // DEsquared V2 with ITG3200 only
//#define DESQUARED6DOFV4    // DEsquared V4 with MPU6050
//#define LADYBIRD
//#define MEGAWAP_V2_STD     // available here: http://www.multircshop.com                    <- confirmed by Alex
//#define MEGAWAP_V2_ADV
//#define HK_MultiWii_SE_V2  // Hobbyking board with MPU6050 + HMC5883L + BMP085
//#define HK_MultiWii_328P   // Also labeled "Hobbybro" on the back.  ITG3205 + BMA180 + BMP085 + NMC5583L + DSM2 Connector (Spektrum Satellite)
//#define RCNet_FC           // RCNet FC with MPU6050 and MS561101BA  http://www.rcnet.com
//#define RCNet_FC_GPS       // RCNet FC with MPU6050 + MS561101BA + HMC5883L + UBLOX GPS http://www.rcnet.com
//#define FLYDU_ULTRA        // MEGA+10DOF+MT3339 FC
//#define DIYFLYING_MAGE_V1  // diyflying 10DOF mega board with MPU6050 + HMC5883L + BMP085 http://www.indoor-flying.hk
//#define MultiWii_32U4_SE         // Hextronik MultiWii_32U4_SE
//#define MultiWii_32U4_SE_no_baro // Hextronik MultiWii_32U4_SE without the MS561101BA for more free flash-memory
//#define Flyduino9DOF       // Flyduino 9DOF IMU MPU6050+HMC5883l
//#define Nano_Plane         // Multiwii Plane version with tail-front LSM330 sensor http://www.radiosait.ru/en/page_5324.html
```

```
/*********************************     ARM/DISARM     *********************************/
/* optionally disable stick combinations to arm/disarm the motors.
 * In most cases one of the two options to arm/disarm via TX stick is sufficient */
#define ALLOW_ARM_DISARM_VIA_TX_YAW
//#define ALLOW_ARM_DISARM_VIA_TX_ROLL
```

FIG 9: Code for MULTIWII

4.6 Autonomy of the Drone

Calibration of Raspi:

Following are the steps we followed for Configuration of Raspi

- Download Rpi Imager from official raspberry pi website
- Insert your SD card into the computer or laptop SD card slot
- In the Raspberry Pi Imager, select the OS that you want to install and the SD card you would like to install it on
- Then simply click the WRITE button
- Once you get the message, you can eject your SD card
- Insert the SD card you've set up with Raspberry Pi OS into the microSD card slot on the underside of your Raspberry Pi.
- Find the USB connector end of your mouse's cable, and connect the mouse to a USB port on Raspberry Pi (it doesn't matter which port you use).
- Connect the keyboard in the same way.

- Use a cable to connect the screen to Raspberry Pi's HDMI port
- Plug the power supply into a socket and connect it to your Raspberry Pi's power port.
- After a few seconds the Raspberry Pi OS desktop will appear.
- Click on Next to start the setup.
- Set your Country, Language, and Timezone, then click on Next again.
- Enter a new username and password for your Raspberry Pi and click on Next.
- Click on Restart to finish the setup

Face recognition:

We are developing an autonomous drone for administration of rescue operations as part of our project, and face recognition will be utilized to find and locate victims trapped in emergency circumstances. Python can be employed to implement face recognition, a common application of computer vision, with the aid of a few modules and tools.

Code for Face recognition

```
# import the necessary packages

from picamera.array import PiRGBArray

from picamera import PiCamera

import time

import cv2


# initialize the camera and grab a reference to the raw camera capture

camera = PiCamera()

camera.resolution = (320, 240)

camera.framerate = 8.0

rawCapture = PiRGBArray(camera, size=(320, 240))
```

```
 # Define the codec and create VideoWriter object
fourcc = cv2.VideoWriter_fourcc(*'XVID')
out = cv2.VideoWriter('output.avi', fourcc, 8, (320,240))
# allow the camera to warmup
time.sleep(0.1)
# capture frames from the camera
for frame in camera.capture_continuous(rawCapture, format="bgr", use_video_port=True):
    # grab the raw NumPy array representing the image, then initialize the timestamp
    # and occupied/unoccupied text
    image = frame.array
    #Load a cascade file for detecting faces
    face_cascade = cv2.CascadeClassifier('/home/pi/project/faces.xml')
    #convert to grayscale
    gray = cv2.cvtColor(image,cv2.COLOR_BGR2GRAY)
    #Look for faces in the image using the loaded cascade file
    faces = face_cascade.detectMultiScale(gray, 1.1, 5)
    #Draw a rectangle around every found face
    for (x,y,w,h) in faces:
        cv2.rectangle(image,(x,y),(x+w,y+h),(255,255,0),2)
    # show the frame
    out.write(image)
    cv2.imshow("Frame", image)
    key = cv2.waitKey(1) & 0xFF
```

```
# clear the stream in preparation for the next frame

rawCapture.truncate(0)

# if the `q` key was pressed, break from the loop

if key == ord("q"):

    Break
```

FIG 10: Pi Cam Face detection

Closed Loop

The above loop explains the flight control algorithm of the drone. It consists of sensors, controllers, plant(drone), Reference values. The sensors give feedback from the real world to the controller, which is in the form of altitude, pressure, position reference etc. the above values are then compared with the set reference points provided to the system and their differences are tuned in the controller using PIDs for each control operation (Thrust, roll, pitch, yaw). The obtained signals from the PIDs are later sent to the plant which is our drone itself in the form of motor speed values. Those values are used for the operation of a motors mixing algorithm to maneuver the drone.

The above loop is used to test the drone in simulation as well with the help of matlab's aerospace block set which helps you to simulate the drone in real life condition and fine tune the PIDs as required.

Chapter 5

Result and Discussion

The method started with the calculation of the thrusts per motor, and using a standardized table, the frame size, propeller size, and motor size were selected in accordance with the value of the thrust. The sensors provide the controller with feedback from the outside environment in the form of altitude, pressure, location reference, and other data. The disparities between the aforementioned values and the system's predetermined reference points are then tuned in the controller using PIDs for each control operation (thrust, roll, pitch, and yaw). The motors mixing algorithm uses these 2 values to control the drone's movement. In our initial testing, the front left ESC burned due to the motor being overpowered, which the ESC couldn't manage. We made a few minor adjustments to our Arduino code to solve this issue.

FIG 11: Setup for First Flight test

FIG 12: Changes after first Flight test

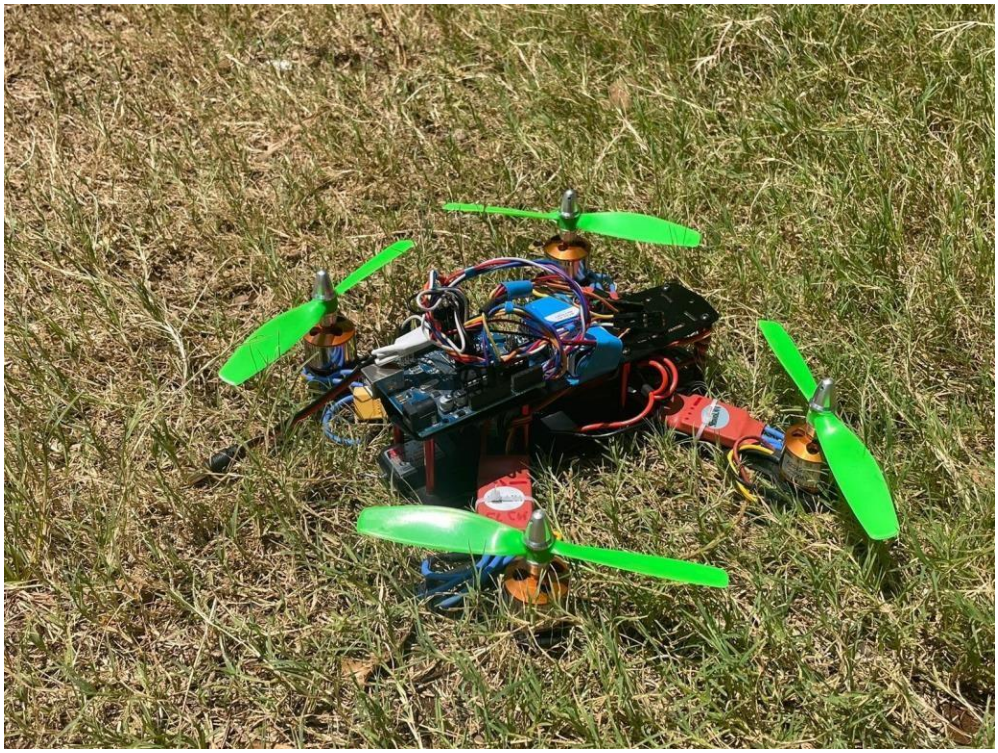

FIG 13: First Prototype of Drone

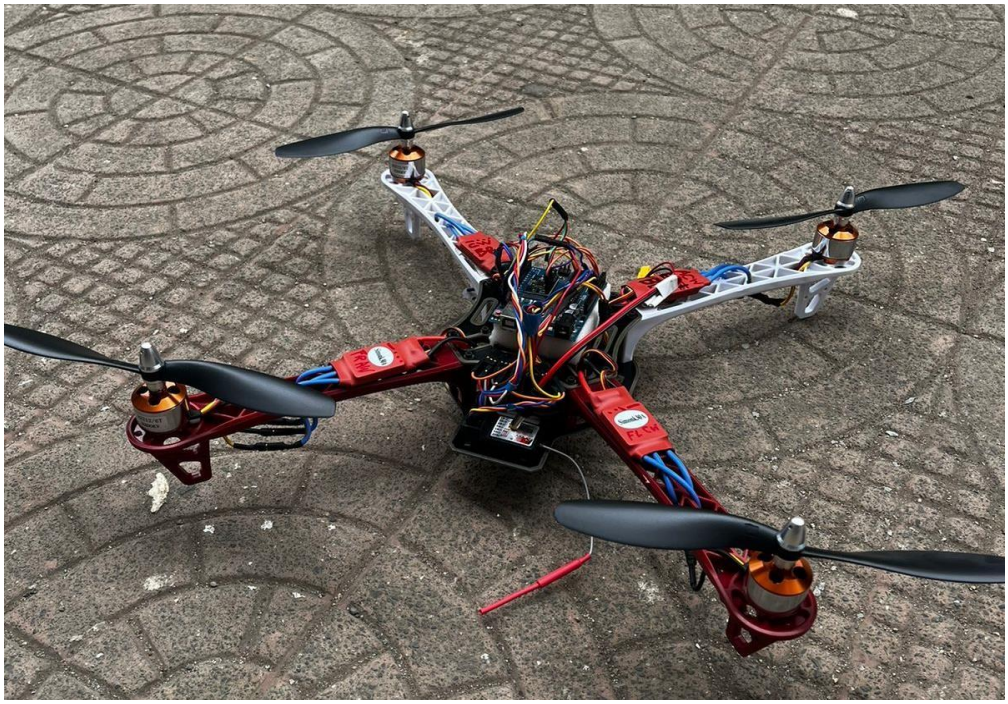

Fig 14: Improved Design of Drone

Chapter 6

Conclusion

Autonomous drones can perform tasks more efficiently and accurately than manually operated drones since they are programmed to follow a specific set of instructions. This means they can cover more ground and complete tasks in less time, increasing productivity and reducing costs. This flexibility makes them useful in various industries.

The test Flight was able to have a maximum height of 10m and the flight time was secs

By using mechatronics and integrating them with automation we successfully developed an autonomous drone using an in-house flight controller.

Chapter 7

Future Scope

Future rescue management with autonomous drones and Open CV has a lot of promise. The drone can perform a variety of tasks, including object identification, tracking, and recognition, thanks to the robust open-source computer vision framework known as Open CV. When time is of the essence and accurate decision-making is essential for rescue operations, these qualities can be especially helpful.

Here are a few potential futures uses for autonomous drones in search and rescue using Open CV:

Autonomous drones with cameras and Open CV software can conduct search and rescue missions. They can quickly scan a disaster area for signs of life, like heat signatures or human shapes, and then report their findings to the rescue crews on the ground.

Disaster assessment: Aerial photographs of disaster-affected areas can be taken by drones. Open CV algorithms can then be used to analyze the photographs to spot damaged structures like roads and other infrastructure.

Medical supply delivery: During emergencies, drones can be used to transport medical supplies like vaccines, blood samples, and pharmaceuticals to distant or difficult-to-reach locations.

Drones can be used to track the development of post-disaster recovery operations, such as infrastructure repair or environmental damage monitoring.

Support for firefighting: Drones with thermal cameras and Open CV algorithms can find hotspots and alert firefighters more quickly and effectively.

Therefore, autonomous drones employing Open CV for rescue management have a promising future, and we may anticipate more developments in this area.

References:

[1] Shahid Karim,Ye Zhang, Asif Ali Laghari, Rizwan Asif, "Image Processing based Drone for monitoring and controlling crime" in Research Gate at IEEE Conference 2017 on Communication Technology.

[2] Fares Jalled and Ilia Voronkov, "Object Detection using Image Processing"

[3] Jeonghoon Kwak & Yundick Sung, "Autonomous UAV Flight Control for GPS-Based Navigation" in IEEE, June 28,2018

[4] Ff. R.T. Collins, A.J. Lipton, T. Kanade, Introduction to the special section on video surveillance, IEEE Trans. Pattern Anal. Mach. Intell. 22 (8) (2000) 745–746

[5] R. C. Gonzalez and R. E. Woods, Digital Image Processing (third edition), Reading, Massachusetts: Addison-Wesley, 1992

[6] G. R. Bradski and J. Davis, Motion Segmentation and Pose Recognition with Motion History Gradients, Machine Vision and Applications, 2002

[7] OpenCV, Learning. "Computer vision with the OpenCV library." GaryBradski, Adrcamcambrian Kaehler(2008).

[8] Department of Automation and Computer Sciences Harz University of Applied Sciences Wernigerode, Saxony-Anhalt, Germany u34947@hs-harz.de

[9] International Journal of Advance Research in Science and EngineeringVolume No.07, Special Issue No.07, April 2018

[10] Drone Design - Calculations and Assumptions September 27, 2022

[11] By Lauren Nagel https://www.tytorobotics.com/blogs/articles/the-drone-design-loop-for-brushless-motors-and-propellers

[12] Quadcopter Hardware Overview – Every Component Explained

10th June 2018 https://oscarliang.com/quadcopter-hardware-overview/

[13]]How To Choose Quadcopter Frame Dec 19th 2018 https://genstattu.com/blog/how-to-choose-quadcopter-frame

Ouriginal by Turnitin

Document Information

Analyzed document	Black Book grp 14.docx (D165552384)
Submitted	5/1/2023 6:29:00 AM
Submitted by	
Submitter email	lokpriya.gaikwad@siesgst.ac.in
Similarity	0%
Analysis address	lokpriya.gaikwad.sies@analysis.urkund.com

Sources included in the report

W URL: https://www.tytorobotics.com/blogs/articles/the-drone-design-loop-for-brushless-motors-and-pro...
Fetched: 5/1/2023 6:29:00 AM 1

Entire Document

Autonomous Drone Using Open CV Submitted in partial fulfillment of the requirements of the degree of Bachelor of Engineering in Mechanical Engineering by
Khushal Tayade 119A6020

Siddhesh Patil 119A6032 Tejas Kamble 119A6051 Sarvesh Vichare 119A6056

Under the Guidance of: Dr. Lokpriya Gaikwad

Department of Mechanical Engineering SIES graduate School of Technology 2022-2023 CERTIFICATE

This is to certify that the project entitled "Autonomous Drone using Open CV" is a Bonafide work of the following students, submitted to the University of Mumbai in partial fulfillment of the requirement for the award of the degree of Bachelor of Engineering in Mechanical Engineering. Khushal Tayade 119A6020 Siddhesh Patil 119A6032 Tejas Kamble 119A6051 Sarvesh Vichare 119A6056

Dr. Lokpriya Gaikwad Dr. Rupendra Nehete Atul Kemkar Internal Guide Head of Department Principal
PROJECT REPORT APPROVAL

This project report entitled (Autonomous drone using open CV)by following students is approved for the degree of Bachelor of Engineering in Mechanical Engineering. Khushal Tayade 119A6020 Siddhesh Patil 119A6032 Tejas Kamble 119A6051 Sarvesh Vichare 119A6056

Name of External Examiner: ---------- Signature:---------- Name of Internal Examiner: ---------- Signature:---------- Date: Place:
DECLARATION I declare that this written submission represents my ideas in my own words and where others' ideas or words have been included, I have adequately cited and referenced the original sources. I also declare that I have adhered to all principles of academic honesty and integrity and have not misrepresented or fabricated or falsified any idea/data /fact/source in my submission. I understand that any violation of the above will be cause for disciplinary action by the Institute and can also evoke penal action from the sources which have thus not been properly cited or from whom proper permission has not been taken when needed.

Khushal Tayade 119A6020